Design Process of Room Temperature Monitor

Doris Siu

1) Summary

This report outlines the creation of a room temperature monitoring system that accurately measures ambient temperature and alerts users when it deviates from the desired range of 70°F to 75°F. The system uses a TMP 36 sensor, Arduino Uno, and an I2C LCD to display readings, with alerts provided by a red LED and a piezo buzzer. The design includes components such as 22 AWG wires, a 9V battery, resistors, and spade connectors, with soldering used for durable wiring.

The device achieves its goals of accurate temperature measurement and effective notifications. However, its size and limited battery life pose challenges for portability and long-term use. Future improvements will focus on reducing size and enhancing battery efficiency. The system is valuable for applications in homes, offices, and environments requiring precise temperature control.

2) Introduction

This report outlines the design and development of a room temperature monitoring system. The project addresses the challenge of creating a sensor that accurately measures room temperature and provides a visual and auditory alert when the temperature goes out of desirable range. The alerts are implemented through a sound alarm and blinking lights, ensuring the user is promptly notified of unfavorable temperature conditions.

The motivation for this project stems from the practical need for efficient and accessible temperature monitoring in various environments, such as homes, offices, or laboratories. Developing such a system not only ensures comfort and safety but also provides an opportunity to apply foundational concepts in mechanical and electrical engineering.

The project aims to introduce essential skills, including designing and wiring circuits, prototyping, and using 3D visualization tools. These skills form a critical base for constructing more complex engineering systems in the future. This report details the steps taken to conceptualize, design, and assemble the room temperature monitor, providing insights into the technical and practical considerations involved.

3) Design elements

a. List of all components used in my design:

- Enclosure box
- LEDs (green and red)
- Buzzer (Piezo capsule)
- Temperature sensor (TMP 36)
- Resistors
- 2-way switch
- 9V battery
- 9V battery holder
- 9V battery snap
- Arduino Uno board
- Twist nuts caps
- Spade connectors
- Screws
- Header pins
- Wires (blue, black, red, gray, orange, and yellow)
- Alphanumeric I2C LCD (16 x 2 characters)

b. Precision measurements:

Item	Sketch identification	W [mm]	L [mm]	H [mm]	Diameter [mm]
ABS enclosure	a	146.5	118	57.3	N/A
Arduino Board	b	44.8	68.4	53.1	N/A
Switch	c	14.6	21	N/A	N/A
LCD 2x16	d	71.8	35.9	8.6	N/A
Buzzer	e	N/A	N/A	10.5	21.6
Temperature sensor	f	N/A	N/A	4.4	3.4

LED	g	N/A	N/A	8.7	4.9

c. CAD drawings:

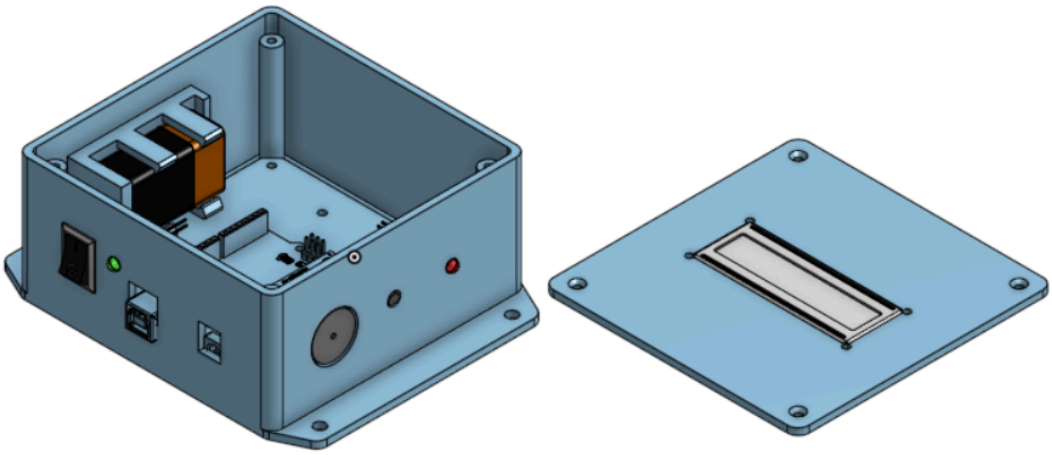

d. Top view pictures of actual prototype with and without the lid while turned on:

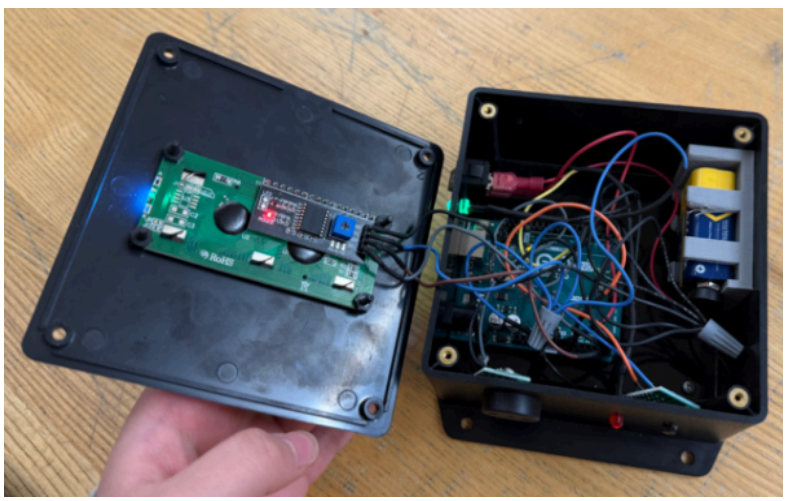

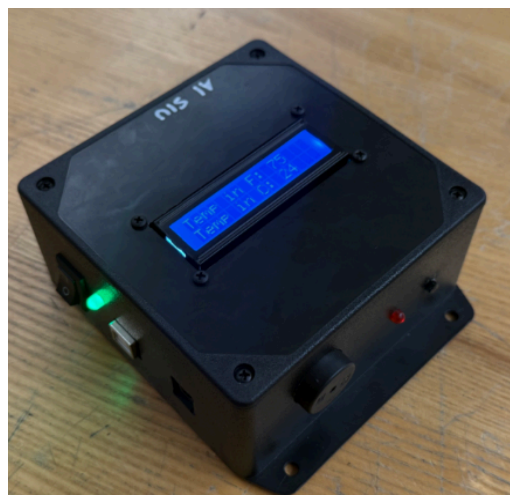

e. The arduino board was used to convert the temperature value that the TMP 36 reads into voltage, which is converted into degrees fahrenheit and celsius.

f. The wiring method used is soldering. Where the wire needs to connect to the Arduino Uno board, head pins are soldered to the wire to be connected to the board. The end of

the blue wires and black wires are connected together with twist caps. Spade connectors are used to connect the 2-way switch to the wiring system.

g. *Wire gauge*: 22 AWG Solid Wire. It's ideal for this device since it can handle up to 7 amps, which goes beyond the 20mA needed for LEDs and components.
Resisters: 1kΩ for green and 220Ω for red. Both LEDs operate at 20mA with a 5V source. However, since red LEDs are dimmer than green LEDs at the same current, different resistor values were used to balance their brightness levels.
Operating currents for both LEDs: KVL states that the sum of all voltages in a loop must equal zero. V(source) = V(LED) + V(Resistor), so 5V = 2V + V(Resistor).

For red LED: I = 3V/220Ω = 13.64 mA

For green LED: I = 2.8V/1000Ω = 2.8mA

h. A 9-V battery is used because for the purpose of this temperature sensor, the battery would not need to run for a long time and therefore something that could effectively power the sensor and fit in the box would be necessary. The charge capacity of the 9V battery is approximately 550mAh. It could last for 7-9 hours. The device can be powered externally using a USB.

i. Arduino code used in my design:

```
#include <Wire.h>
#include <LiquidCrystal_I2C.h>
#include "pitches.h"
LiquidCrystal_I2C lcd(0x27,16,2);

int pot_pin = A0;
int pot_value;
float Voltage;
int TempC;
int TempF;
int Buzzer = 5;
int redLED = 3;

int melody[] = {
  NOTE_G4
```

```
};

int noteDurations[] = {
 4
};

void setup()
{
 Serial.begin(9600);
 lcd.init();
 pinMode(Buzzer, OUTPUT);
}

void loop()
{
 pot_value=analogRead(pot_pin);
 Voltage=(pot_value/1023.0)*5;
 TempC = (Voltage - 0.5) * 100;
 TempF = (9 * TempC / 5) + 32;
 Serial.println("Pot Value=");
 Serial.println(pot_value);
 Serial.println("Voltage=");
 Serial.println(Voltage);
 Serial.println("TempC=");
 Serial.println(TempC);
 Serial.println("TempF=");
 Serial.println(TempF);

 lcd.backlight();
 lcd.setCursor(0,0);
 lcd.print("Temp in F:");
 lcd.setCursor(11,0);
 lcd.print(TempF);
 lcd.setCursor(0,1);
 lcd.print("Temp in C:");
 lcd.setCursor(11,1);
 lcd.print(TempC);

 if (TempF > 85 || TempF < 80)
 {
  digitalWrite(redLED, HIGH);
```

```
  playSong();
 }

 delay(500);
 digitalWrite(redLED, LOW);
}

void playSong()
{
 for (int thisNote = 0; thisNote < sizeof(melody) / sizeof(melody[0]); thisNote++)
 {
  int noteDuration = 1000 / noteDurations[thisNote];
  tone(Buzzer, melody[thisNote], noteDuration);
  int pauseBetweenNotes = noteDuration * 1.30;
  delay(pauseBetweenNotes);

  noTone(Buzzer);
 }
}
```

j. *Voltage of power supply:* 9V for 9V battery, 7-12V for DC power supply, and 5V using the USB port

Operating voltage of this circuit: 5V

Current Draw: 90-130 mA

Temperature Range: 70°F to 75°F

LED Resistor Values: 1kΩ for Green LED, 220Ω for Red LED (Justification in section G of part 3)

4) Evaluation of Results

The design objectives have successfully been achieved since temperature is accurately measured using the TMD 36 and displayed with the LCD, warning the user with a buzzer alarm and a flashing red LED when the temperature falls below 70℉ or exceeds 75℉. All the necessary parts are included in the enclosure and the battery can be easily replaced by taking off the enclosure screws.

Compared to standard thermometers, this temperature sensor is easy to read, even in dark environments by virtue of the bright backlight of the LCD. It also measured temperature with

good accuracy like other thermometers. However, the device is not without limitations. It is a relatively large and heavy device to carry around compared to other available temperature sensors. It would be an inconvenient choice for any user. Additionally, the battery would only allow it to run for a few hours, therefore, constant battery change would be necessary. The future goal for this device would be to make it smaller and have a greater battery life by using a larger battery.

Still, this temperature sensor is useful as it could be used in many environments such as home and office. If for any medical or personal reasons someone needs to track the temperature to make sure they are not exposed to a certain range of temperature, this device would be helpful for them.

5) Supporting Materials (appendix)

a) Enclosure sketches:

Top view

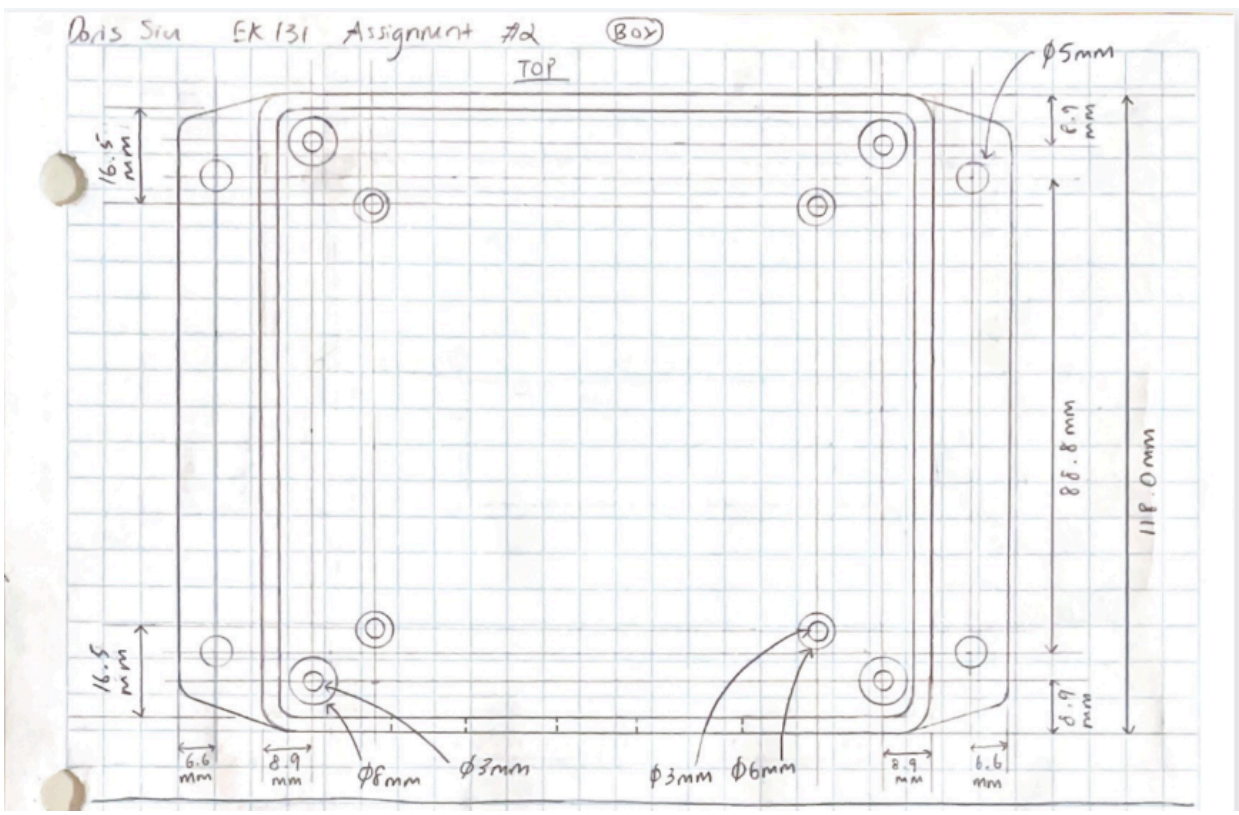

Front view

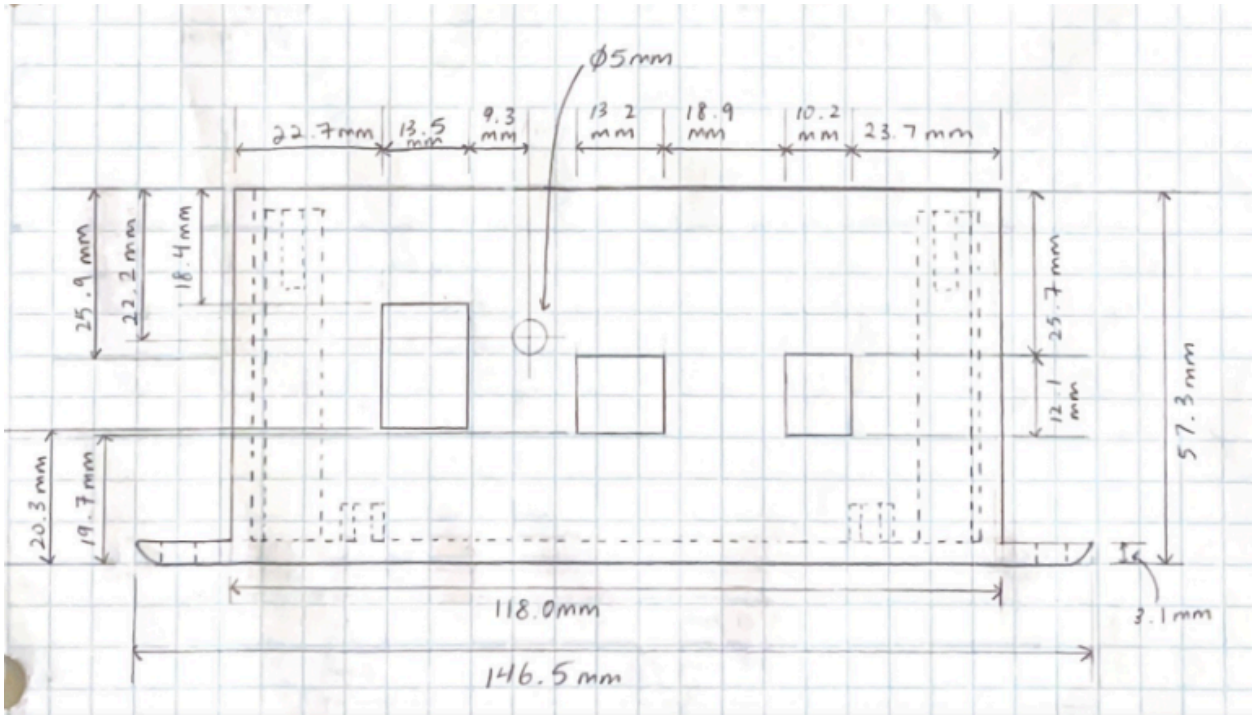

b) Arduino board

Top view

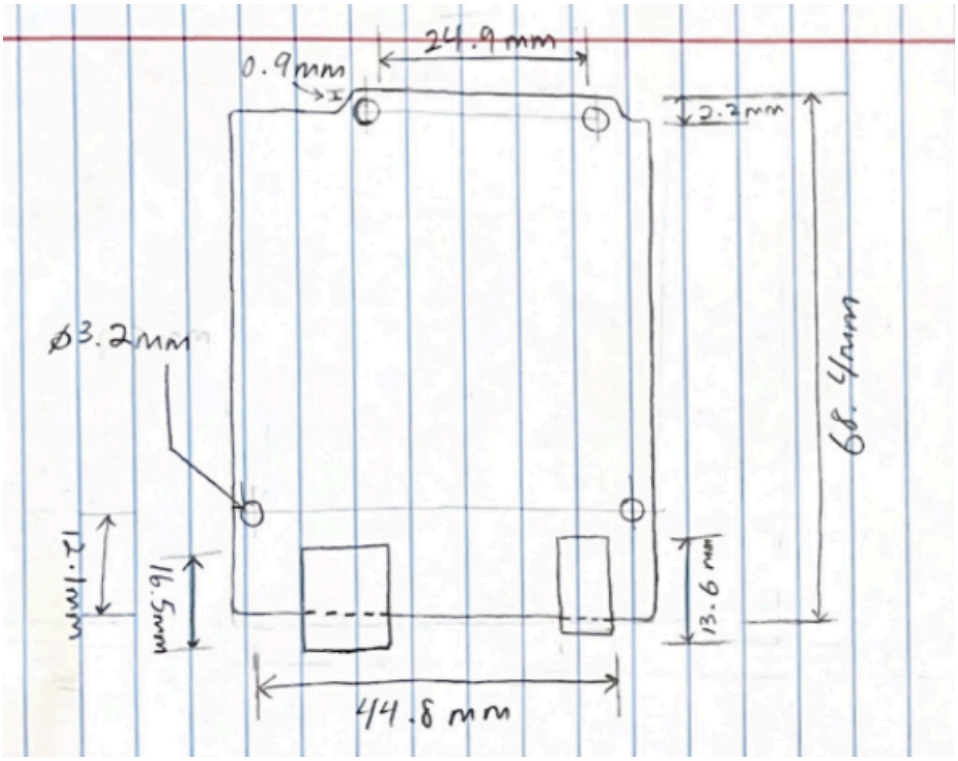

Front View

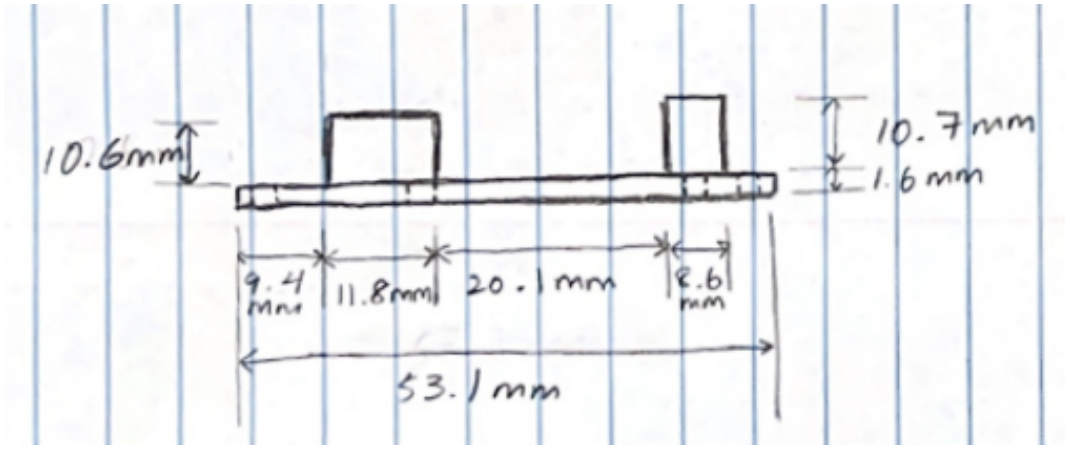

c) Switch

Top View

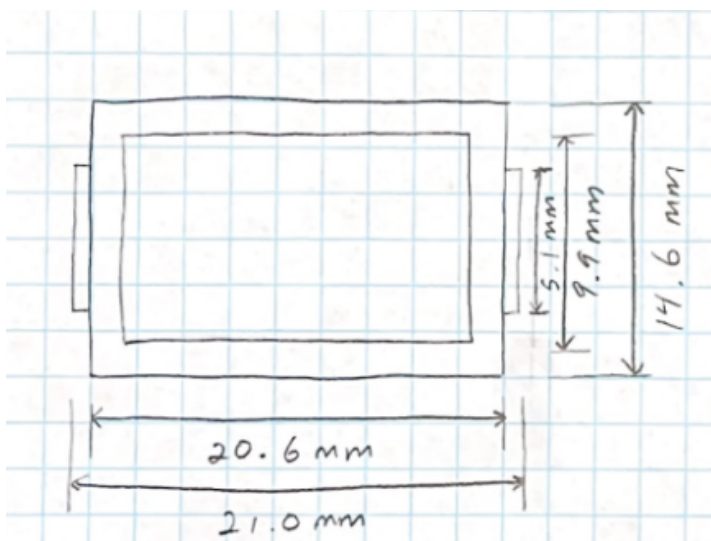

d) LCD 2x16

Top View

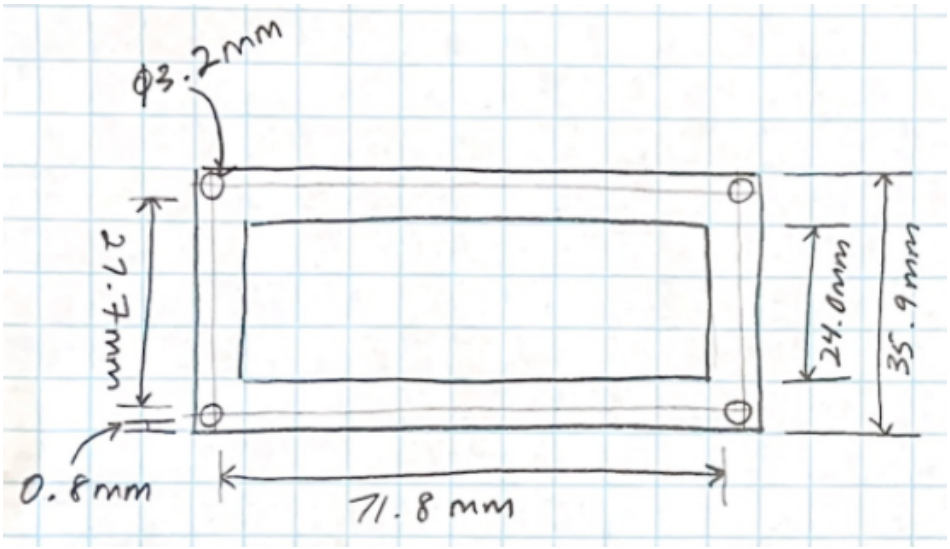

Front View

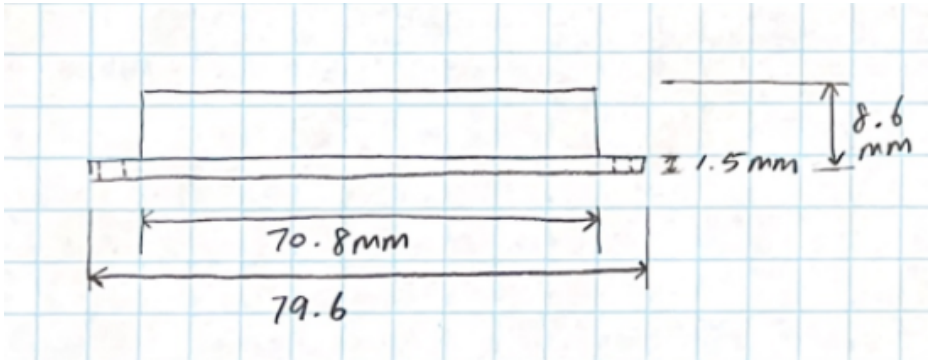

e) Buzzer

Top View

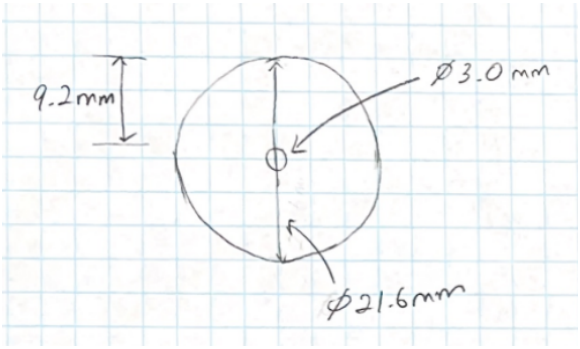

Front View

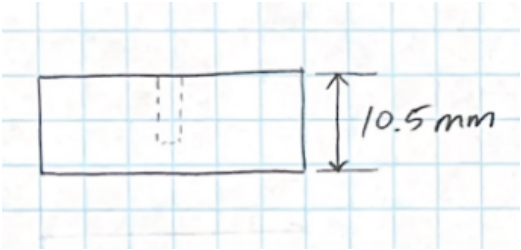

f) Temperature sensor

Top View

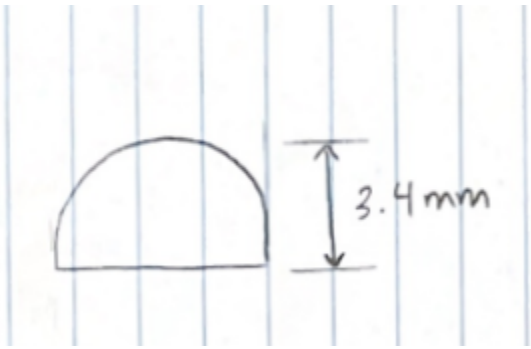

Front View

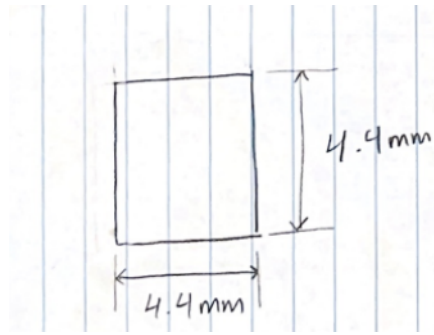

g) LED

Top View
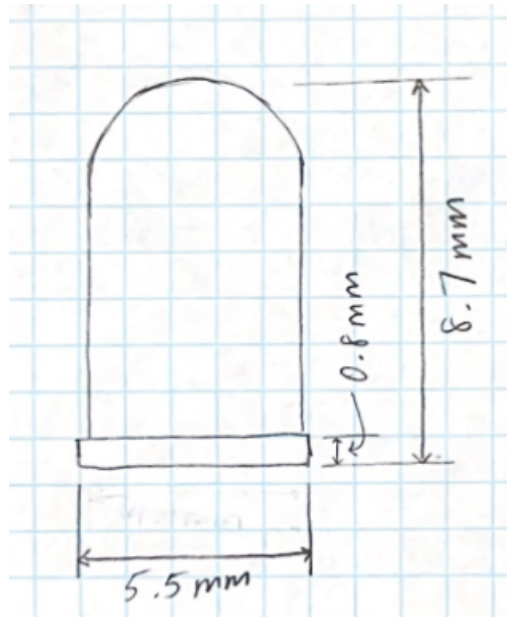
Front View